IM-0350-22 Ice Cube Machine

Models

☐ IM-0350-AC-22 ☐ IM-0350-AH-22

ICETRO IM-0350-22 ice machine on a IB-026-22 bin

*Ice Machine and Bin sold separately

- Up to 394 lbs production capacity (70F/50F, 24 Hours)
- 304 stainless-steel exterior (durable & rust-resistant)
- Simple diagnostic panel to assist service & maintenance
- Cleaning switch for auto cleaning cycle
- Magnetic frame cleanable condenser air filters
- Adjustable flush time to reduce scale & cleaning cost
- ABS antimicrobial interior to reduce slime & cleaning cost
- Water distributor tube & water sump removed w/o tools
- Heavy duty water curtain, pins & hangers for easy removal
- Hinged front doors for easy access
- No screws on side or back panels for easy access
- Sides & top vents for optimal ventilation
- Improved evaporator section to reduce airborne bacteria
- Power cord with NEMA 5-15 plug
- R-404A refrigerant

Ice Shape

Half Cube
⅜" x 1⅛" x ⅞"
(.95 x 2.86 x 2.22 cm)

Cube
⅞" x ⅞" x ⅞"
(2.22 x 2.22 x 2.22 cm)

Factory Warranty

Parts & Labor		Parts
3 YR	5 YR	5 YR
Ice Maker	Evaporator	Compressor

Extend parts & labor warranty 1 year by installing an IcePro filter/cartridge and by registering it at: icetrowaterproducts.com/registration/

* Applies only to new ice machines, at the time of original installation & start-up.

** Requires replacement of the filter cartridge every 6 months or earlier

Specifications

BTU Per Hour:

5,405

Refrigerant:

R404A

- Ambient Temperature Range: 50 to 100 F (10 to 37 C)
- Water Temperature Range: 50 to 90 F (10 to 32 C)
- Potable Water Pressure: Min. 20 psi (137.9 kPA) Max. 80 psi (551.1 kPA)
- Condenser Water Pressure: Min. 20 psi (1.38 bar) Max. 150 psi (10.34 bar)

Ice Machine Electric

115/60/1

Minimum circuit ampacity:
Air-cooled: 15 *1ph*

Maximum fuse size:
Air-cooled: 20 *1ph*

Accessories

Bin Adapter
IBT-2230B Center Mount 30" Bin*
IBT-2230BV Center Mount 30" Bin

* Bins with S/N prior to VA/JJ

Bin-Stat Kit
IBO-150KIT
Recommended when ice machine is installed on soda dispenser.

Water Filtration
IcePro 400
Reduces sediment and chlorine contaminants with the use of Citrine.

Icetro America, Inc. - 1202 W Struck Ave, Orange, CA 92867 Phone 714-215-4864 www.IcetroAmerica.com
- 6432 Warren Dr, Norcross, GA 30093 Phone 470-567-8603

IM-0350-22 Ice Cube Machine

IM-0350-22 Air Cooled

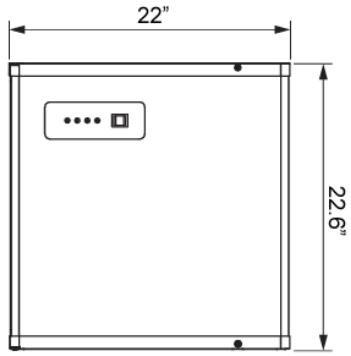

FRONT VIEW

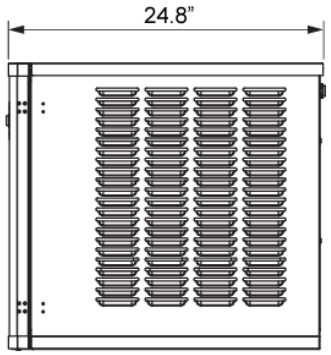

SIDE VIEW

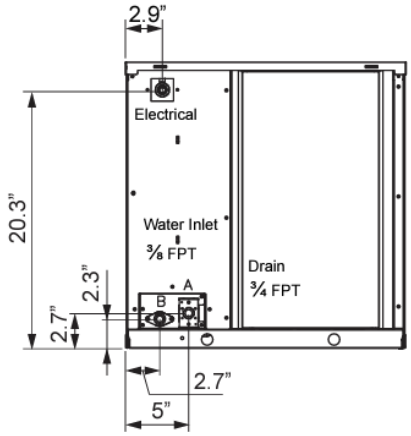

BACK VIEW

Specifications

Dimensions	Width	Depth	Height	Weight
IM-0350-22 Machine	22"	24.8"	22.6"	143.3 lbs (Net) 168 lbs (Shipping)

	Model	Ice Shape	Ice Production 24 Hours		Power Usage kWh/100 lbs. @90°Air/70°F	Potable Water Usage/100 lbs. 45.4 kgs. of Ice
			70°Air/ 50°F Water	90°Air/ 70°F Water		
			1 ph	1 ph	1 Ph	
AIR COOLED	IM-0350-AC-22	cube	394 lbs	346 lbs	6.27	18 Gal.
			179 kgs	157 kgs		18 Gal.
	IM-0350-AH-22	half-cube	394 lbs	346 lbs	6.27	18 Gal.
			179 kgs	157 kgs		18 Gal.

Icetro America, Inc. - 1202 W Struck Ave, Orange, CA 92867
- 6432 Warren Dr, Norcross, GA 30093
Phone 714-215-4864
Phone 470-567-8603
www.IcetroAmerica.com