efi sales Ltd.

Equipment for the Foodservice Industry

value + quality + service

X-LINE 72" Refrigerated Salad/ Sandwich Prep Table

Model No:

CSDR3-72VCX

CSDR3-72VCX Features

Features:

- Stainless steel interior and exterior
- Round corner design for inner bottom board
- Polyethylene cutting board
- Self-closing swing door w/90°stay open feature
- Recessed handles
- Removable gasket that is easy to clean and replace
- Adjustable/removable plastic coated wire shelves
- Enclosed condiment section
- R290 refrigeration system holds 33°F to 41°F (0.5°C to 5°C)
- Insulated lid on prep units helps to maintain food freshness
- Casters for easy movement
- Adjustable temperature set point and defrost frequency
- Error codes to diagnose service issues
- Condenser access at rear of unit, slides out for easy maintenance

Warranty:

- Two year parts and labour; Five years on compressor. *For full warranty details visit https://www.efifoodequip.com/warranty-info.php*

Intertek Intertek EQUIPMENT FOR THE FOODSERVICE INDUSTRY

CSDR3-72VCX Specifications

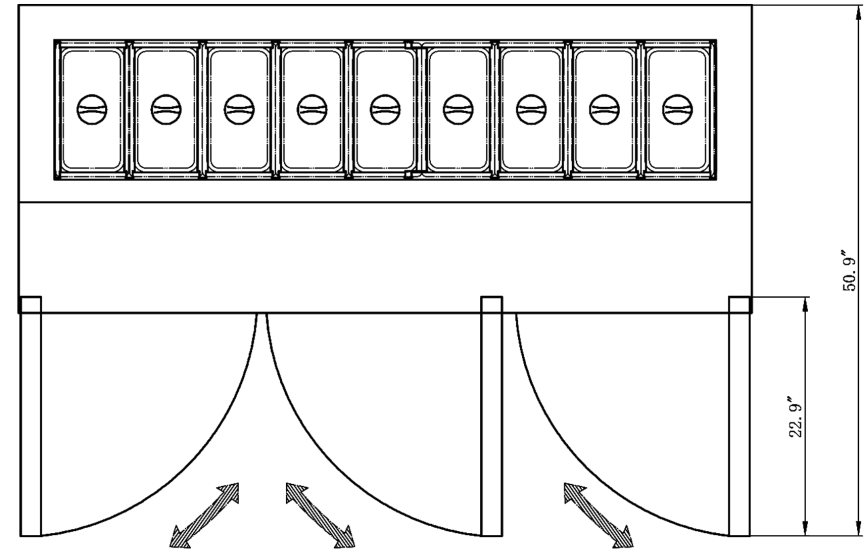

PLAN

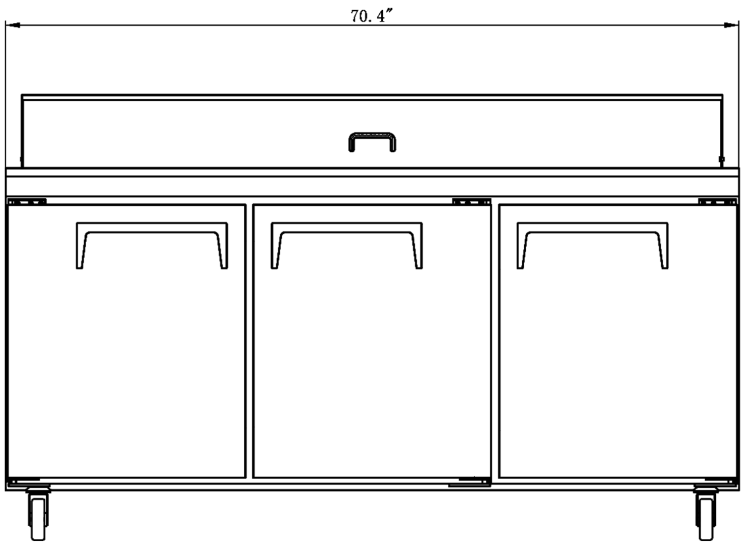

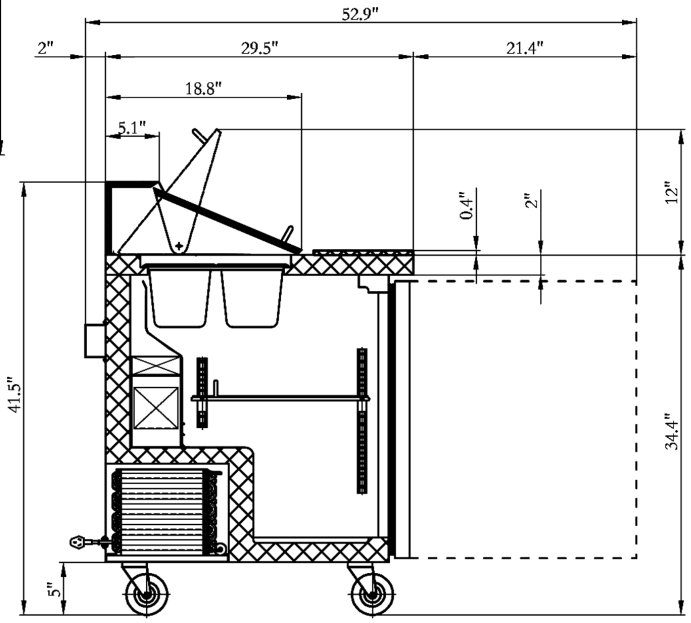

SECTION VIEW

Model	Doors	Shelves	Dimension (mm) (inch) W	D	H	HP	Voltage	Amps	Capacity (L) (Cu Ft.)	Net Weight (KG) (LBS)	NEMA Config.
CSDR3-72VCX	3	3	1787	750	1055	1/2	115/60/1	6.48	440	172	5-15P
			70.4	29.5	41.5				15.5	380	

Specifications subject to change without notice.

efi sales Ltd.
Equipment for the Foodservice Industry
value + quality + service

EFI Sales Ltd.
Toronto Office
515 Hanlon Creek Blvd
Guelph, ON N1C 0A1

EFI Sales Ltd.
Vancouver Office
26895 Gloucester Way
Langley, BC V4W 3Y3

Distribution Facilities:
Toronto, ON
Langley, BC

(888) 565-9920 Toll Free
(519) 822-1895 Toronto
(604) 607-8850 Vancouver
info@efifoodequip.com
www.efifoodequip.com